AUTOMATIC FAUCET

COTTO

CT4903AC AUTOMATIC BASIN FAUCET/ WALL MOUTED(ELECTRICITY USE)
Barcode 8852410490290
Material No. Z231CT4903ACXXXX21

Selling Point

1. Extra Chrome : Plated with 8 Micron Nickel-Chromium
2. Double Infrared Beam : 2 Infrared transmitter, Increases the sensor accuracy
3. Moisture Protection : water and moisture durable Electronic set
4. Plug & Play : Ready to use right after installation
5. The sensor can be installed on the left side , right side and above the spout

Product characteristics

- pices/box : 4
- Inner box weight (Kg.) : 1
- Total box weight (Kg.) : 4

Recommended Usage

Install on wall, use with Above Counter or Under Counter basin

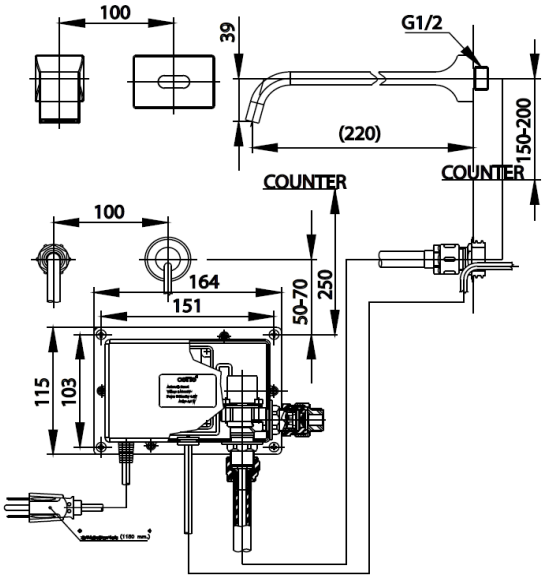

Siam Sanitary Ware Co.,Ltd. / Siam Sanitary Fittings Co.,Ltd.
36/11 Viphavadee Rangsit Rd, Sanam Bin, Donmuang, Bangkok 10210. Thailand
Tel : + 66 (0) 2973-5040-54
Fax : + 66 (0) 2973-3470
www.cotto.co.th
Export Department
Tel : + 66 (0) 2973-5040-54
Fax : + 66 (0) 2973-3472

COTTO STUDIO

Center	**(Donmuang ,Bangkok)**	**: +66 (0) 2521-7777**
East	**(Chonburi)**	**: +66 (038) 416-222**
North	**(Chiangmai)**	**: +66 (053) 211-852**
North East	**(Khonkean)**	**: +66 (043) 220-555**
South	**(Phuket)**	**: +66 (076) 261-388**

The company reserves the right to change any of the details in the document without prior notice