THANTARA Series

COTTO

CT2254A ก๊อกผสมลงอ่างอาบน้ำแบบก้านโยก
CT2254A LEVER HANDL EXPOSED BATH MIXER
Barcode 8852410222549
Material No. Z231CT2254AXXXXX11

Selling Point

1. Extra Chrome : Nickel-chromium plated up to 8 micron.
2. COTTO CLEAN : Heavy metal substances control : Zinc, Lead, Cadmium and Copper
3. Unique design : inspire from Thai identity.

Product characteristics

- pices/box : 1
- Inner box weight (Kg.) : 1
- Total box weight (Kg.) : 2

Recommended Usage

Install on wall, use with bathtub and flexible shower hose

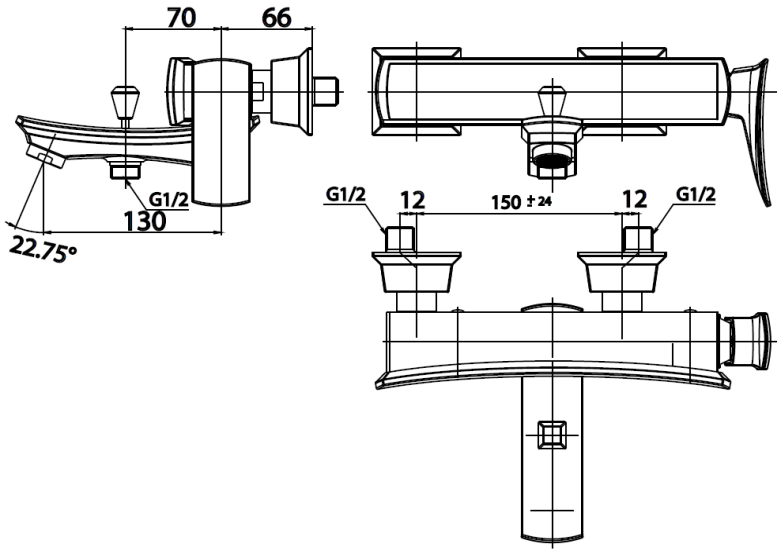

Siam Sanitary Ware Co.,Ltd. / Siam Sanitary Fittings Co.,Ltd.
36/11 Viphavadee Rangsit Rd, Sanam Bin, Donmuang, Bangkok 10210. Thailand
Tel : + 66 (0) 2973-5040-54
Fax : + 66 (0) 2973-3470
www.cotto.co.th
Export Department
Tel : + 66 (0) 2973-5040-54
Fax : + 66 (0) 2973-3472

The company reserves the right to change any of the details in the document without prior notice

COTTO STUDIO

Center	**(Donmuang ,Bangkok)**	**: +66 (0) 2521-7777**
East	**(Chonburi)**	**: +66 (038) 416-222**
North	**(Chiangmai)**	**: +66 (053) 211-852**
North East	**(Khonkean)**	**: +66 (043) 220-555**
South	**(Phuket)**	**: +66 (076) 261-388**