MINIMUS Series

CT1061 BASIN FAUCET
Barcode 8852410106290
Material No. Z231CT1061XXXXXX11

Selling Point

1. COTTO CLEAN : Metal Contaminant-Controlled (Lead, Cadmium, Copper, Zinc)
2. Extra Chrome : Plated with 8 Micron Nickel-Chromium
3. Eco Range : Save over 20% compare to TIS (Thailand Industrial Standard)

Product characteristics

- pices/box : 6
- Inner box weight (Kg.) : 1
- Total box weight (Kg.) : 5

How to use

Install on wall, use with Above Counter basin or Countertop basin

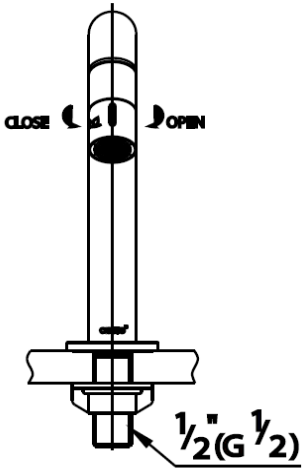

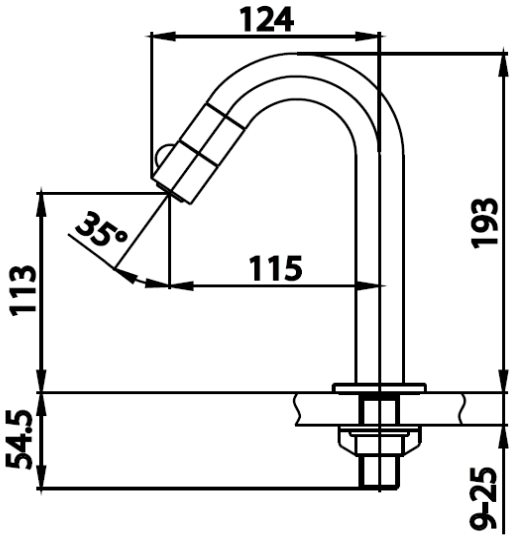

Siam Sanitary Ware Co.,Ltd. / Siam Sanitary Fittings Co.,Ltd.
36/11 Viphavadee Rangsit Rd, Sanam Bin, Donmuang, Bangkok 10210. Thailand
Tel : + 66 (0) 2973-5040-54
Fax : + 66 (0) 2973-3470
www.cotto.co.th
Export Department
Tel : + 66 (0) 2973-5040-54
Fax : + 66 (0) 2973-3472

COTTO STUDIO

Center	**(Donmuang ,Bangkok)**	**: +66 (0) 2521-7777**
East	**(Chonburi)**	**: +66 (038) 416-222**
North	**(Chiangmai)**	**: +66 (053) 211-852**
North East	**(Khonkean)**	**: +66 (043) 220-555**
South	**(Phuket)**	**: +66 (076) 261-388**

The company reserves the right to change any of the details in the document without prior notice